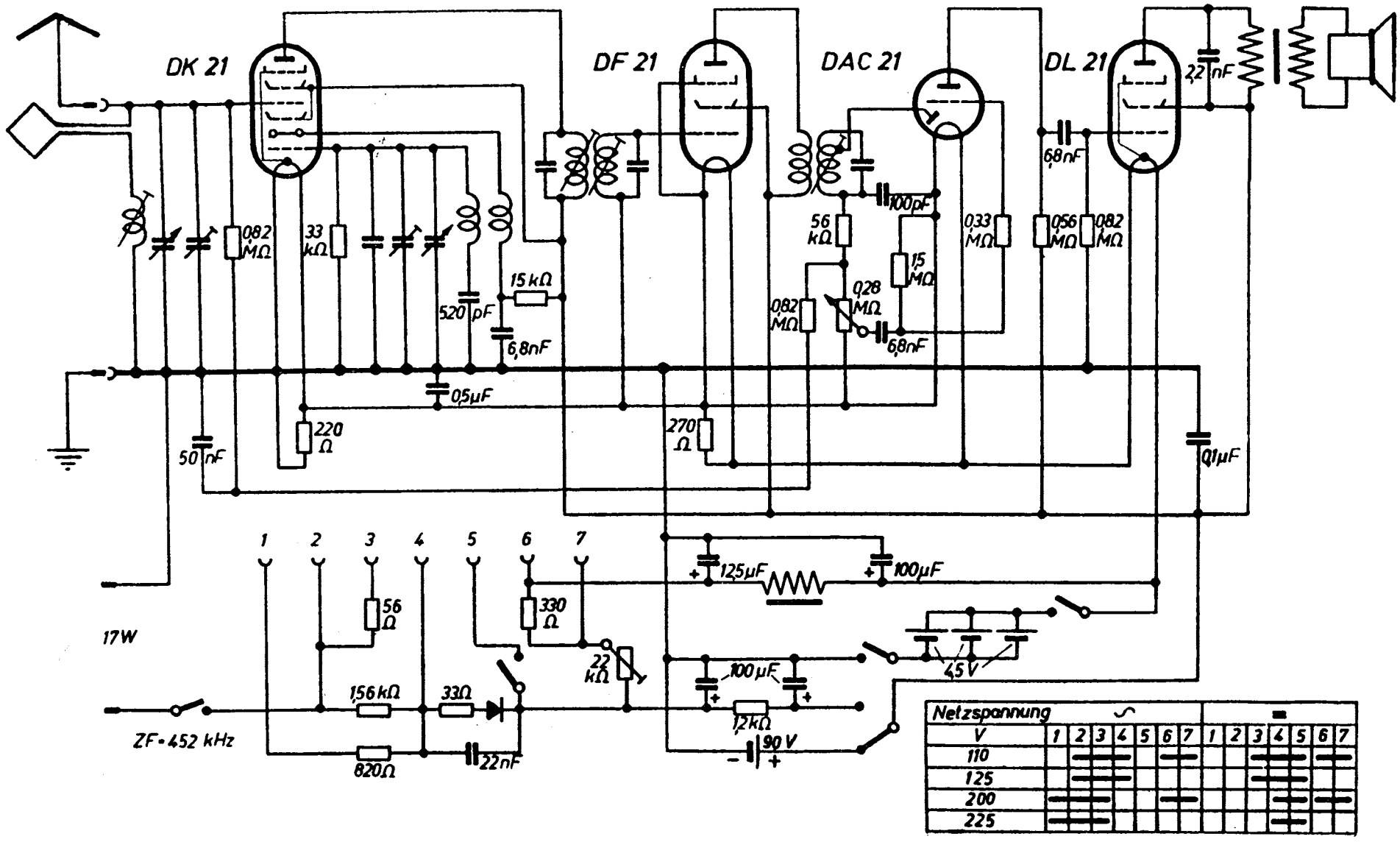


| Netzspannung | ~ | | | | | | | ⎓ | | | | | | |
|---|---|---|---|---|---|---|---|---|---|---|---|---|---|---|
| V | 1 | 2 | 3 | 4 | 5 | 6 | 7 | 1 | 2 | 3 | 4 | 5 | 6 | 7 |
| 110 | | — | — | — | | — | | | | — | — | — | — | |
| 125 | | — | — | — | | | | | | — | — | — | | |
| 200 | — | — | — | | | — | | | | | — | — | — | |
| 225 | — | — | — | | | | | | | | — | — | | |